LTR-E Economy Series

1.5W, 12VDC and 24VDC
LED Tape Specification Sheet

GMLighting®

Project Name	Type
Catalog #	Date

PRODUCT OVERVIEW

GM's Economy Series Flexible Tape standardizes our approach to LED linear lighting without sacrificing quality. Field cuttable and available in an assortment of color temps. and colors - LTR-E Series provides an economical solution in an efficient and reliable LED tape. 16'-4" (5M) reels and connectible by GM Lighting Sure-Tite connectors (not included).

FEATURES

- 2700K, 3000K, 3500K, 4000K and Amber, Blue, Green, Red color temps
- Remote control with GM's LUXcontrol™ App and controllers
- Cuttable every 2" (12V & colors)
- Cuttable every 4" (24V)
- 2835 LED diodes
- 60 LED's per meter (18/ft.)
- 120° viewing angle
- Dimmable
- 3M adhesive back
- Maximum run on a given lead is 32'-8"
- Custom lengths available consult factory

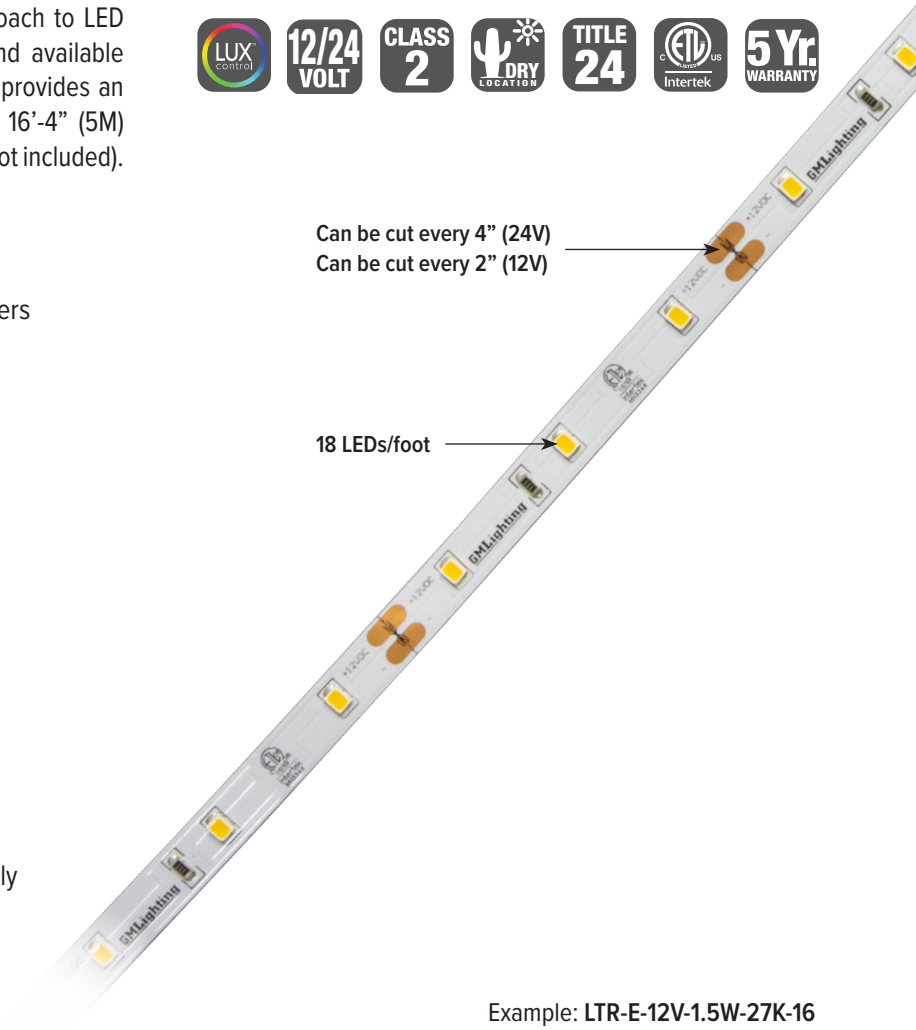

SPECIFICATIONS

ELECTRICAL
- 12V/24V
- 1.5 watts per foot

OPTICS
- 80+ CRI
- Amber (590-595nm)
  Blue (460-470nm)
  Green (510-525nm)
  Red (620-630nm)

CERTIFICATION
- ETL
- IP20
- Class 2

WARRANTY
- 5 years when paired with GM power supply

ORDERING INFORMATION

Example: **LTR-E-12V-1.5W-27K-16**

Model	-	Series	-	Voltage	-	Wattage	-	Color Temp	-	Reel Length
LTR		E		12V		1.5W		27K (2700K)		16 (16'-4")
								30K (3000K)		
				24V				35K (3500K)		100 (98'-6")
								40K (4000K)		
LTR		E		12V		1.5W		AM (Amber)		16 (16'-4")
								BL (Blue)		
								GR (Green)		
								RD (Red)		

ACCESSORIES

Product No.	Description
STC-1	Sure-Tite tape to tape connector
STC-90	Sure-Tite 90° connector
STLK-60	Sure-Tite 60" adjustable tape to tape connector
STW-60	Sure-Tite 60" adjustable tape to power connector
STW-CO	Sure-Tite tape to power supply connector (no wire)

LED Tape Specification Checklist:
1. Select Tape
2. Select Connectors
3. Select Channels
4. Select Controllers or Dimmers
5. Select Power Supplies

Install Sheet

©2026 GM LIGHTING, LLC • www.gmlighting.net • Specifications subject to change without notice
18700 Ridgeland Ave., Tinley Park, IL 60477 • Toll-Free: (866) 671-0811 FAX: (708) 478-2640 • tech@gmlighting.net

LTR-E Economy Series

1.5W, 12VDC and 24VDC
LED Tape Specification Sheet

GMLighting®

Product No.	Length	Lumens	CRI	Color Temp	Max Run
LTR-E-12V-1.5W-27K-16	16'-4" / 5M	149	80+	2700K	32'-8"
LTR-E-12V-1.5W-30K-16	16'-4" / 5M	160	80+	3000K	32'-8"
LTR-E-12V-1.5W-35K-16	16'-4" / 5M	152	80+	3500K	32'-8"
LTR-E-12V-1.5W-40K-16	16'-4" / 5M	174	80+	4000K	32'-8"
LTR-E-12V-1.5W-27K-100	98'-6" / 30M	149	80+	2700K	32'-8"
LTR-E-12V-1.5W-30K-100	98'-6" / 30M	160	80+	3000K	32'-8"
LTR-E-12V-1.5W-35K-100	98'-6" / 30M	152	80+	3500K	32'-8"
LTR-E-12V-1.5W-40K-100	98'-6" / 30M	174	80+	4000K	32'-8"
LTR-E-12V-1.5W-AM-16	16'-4" / 5M	N/A	N/A	Amber	32'-8"
LTR-E-12V-1.5W-BL-16	16'-4" / 5M	N/A	N/A	Blue	32'-8"
LTR-E-12V-1.5W-GR-16	16'-4" / 5M	N/A	N/A	Green	32'-8"
LTR-E-12V-1.5W-RD-16	16'-4" / 5M	N/A	N/A	Red	32'-8"
LTR-E-24V-1.5W-27K-16	16'-4" / 5M	149	80+	2700K	32'-8"
LTR-E-24V-1.5W-30K-16	16'-4" / 5M	160	80+	3000K	32'-8"
LTR-E-24V-1.5W-35K-16	16'-4" / 5M	152	80+	3500K	32'-8"
LTR-E-24V-1.5W-40K-16	16'-4" / 5M	174	80+	4000K	32'-8"
LTR-E-24V-1.5W-27K-100	98'-6" / 30M	149	80+	2700K	32'-8"
LTR-E-24V-1.5W-30K-100	98'-6" / 30M	160	80+	3000K	32'-8"
LTR-E-24V-1.5W-35K-100	98'-6" / 30M	152	80+	3500K	32'-8"
LTR-E-24V-1.5W-40K-100	98'-6" / 30M	174	80+	4000K	32'-8"

Kelvin temperature (color) ±100K.
16'-4" and 98'-6" reel includes 48" lead affixed to tape. Sure-Tite connectors not included.

COMPATIBLE CONTROLLERS

Product No.	Description
SHWC	LUXcontrol Smart 2.4 GHz WiFi Controller, Standard 12V/24V Low Voltage
SHWD	LUXcontrol Smart 2.4 GHz WiFi Dimmer, Standard 12V/24V Low Voltage
SWDD60W12V	SwitchLD All-in-One Dimmer and Driver, 60W, 12VDC
SWDD60W24V	SwitchLD All-in-One Dimmer and Driver, 60W, 24VDC
SWDD96W24V	SwitchLD All-in-One Dimmer and Driver, 96W, 24VDC
HC-RF-UNV-5CH	Universal 1-5 Channel RF Remote Control
CM-RF-UNV-5CH	Universal 1-5 Channel Control Module
RPT-UNV-5CH	Universal 1-5 Channel Repeater Amplifier

©2026 GM LIGHTING, LLC • www.gmlighting.net • Specifications subject to change without notice
18700 Ridgeland Ave., Tinley Park, IL 60477 • Toll-Free: (866) 671-0811 FAX: (708) 478-2640 • tech@gmlighting.net

LTR-E Economy Series

1.5W, 12VDC and 24VDC
LED Tape Specification Sheet

GMLighting®

RECOMMENDED DRIVERS

Product No.	Description	Watts	Specification Sheet
LD-XD-UNV	LineDrive Electronic Multi-Dimmable Power Supply, 12VDC/24VDC	20W, 40W, 60W, 96W, 180W, 200W, 300W	View Spec Sheet
LD-MD-UNV	LineDrive Magnetic Dimmable Power Supply, 12VDC/24VDC	30W, 60W, 96W, 150W, 200W, 300W	View Spec Sheet
LD-EDM	LineDrive Electronic Dimmable MINI Power Supply, 12VDC/24VDC	60W	View Spec Sheet
LTP	Cord and Plug Power Supply, 12VDC/24VDC	25W, 48W, 60W, 90W	View Spec Sheet
PSD	Electronic Dimmable Power Supply, 12VDC/24VDC	15W, 24W, 60W, 90W	View Spec Sheet

NOTE: Please see our website for updated power supply specifications and information.

DIMENSIONS

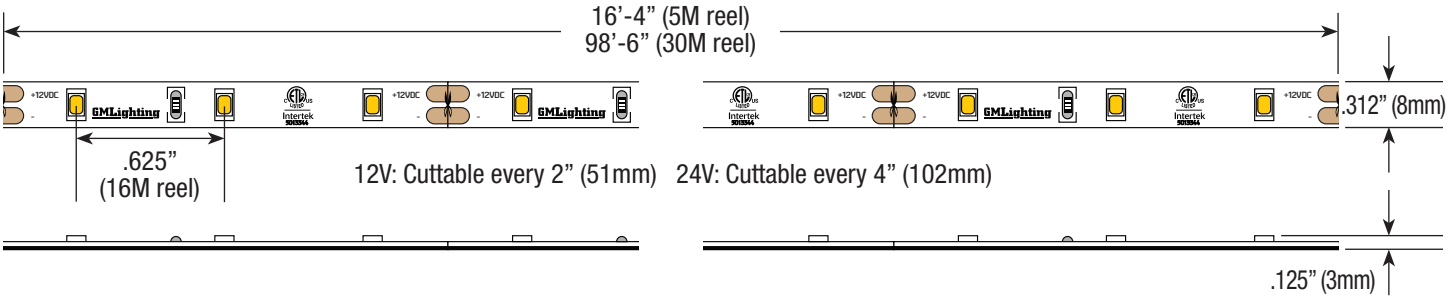

ST SERIES CONNECTORS

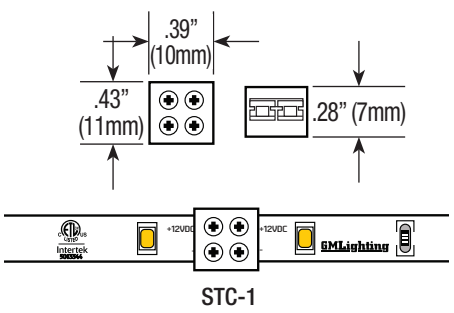

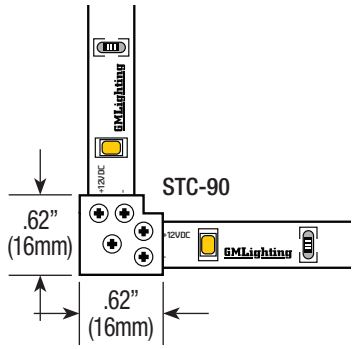

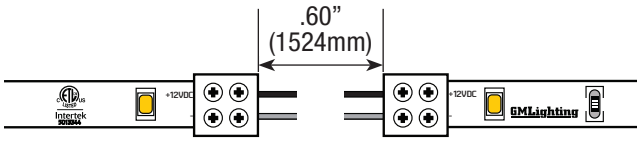

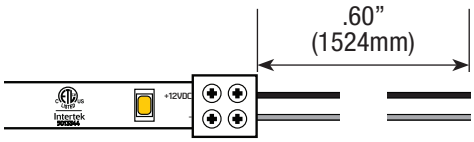

©2026 GM LIGHTING, LLC • www.gmlighting.net • Specifications subject to change without notice
18700 Ridgeland Ave., Tinley Park, IL 60477 • Toll-Free: (866) 671-0811 FAX: (708) 478-2640 • tech@gmlighting.net

LTR-E Economy Series

1.5W, 12VDC and 24VDC
LED Tape Specification Sheet

GMLighting®

COMPATIBLE CHANNELS - FIT CONNECTORS ON PG. 1

EXTRA DEEP

Product No.	Description	Length	Dimensions
LED-CHL-XD	Extra deep format extruded channel. Includes snap-on frosted lens with mounting clips and screws.	4’	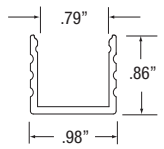
LED-CHL-XD-6	Extra deep format extruded channel. Includes snap-on frosted lens with mounting clips and screws.	6’	
LED-CHL-XD-AMC	(2) Adjustable mounting brackets for LED-CHL-XD	N/A	
LED-CHL-XD-EC	(2) End caps for LED-CHL-XD. One solid, one with hole.	N/A	
LED-CHL-XD-MC	(2) Mounting clips and screws for LED-CHL-XD	N/A	

EXTRA DEEP FLANGED

LED-CHL-XD-F	Extra deep format extruded channel with flange. Includes snap-on frosted lens with mounting clips and screws.	4’	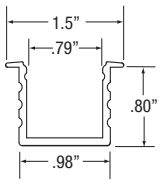
LED-CHL-XD-F-6	Extra deep format extruded channel with flange. Includes snap-on frosted lens with mounting clips and screws.	6’	
LED-CHL-XD-F-DC	(2) Drywall mounting brackets for LED-CHL-XD-F	N/A	
LED-CHL-XD-F-EC	(2) End caps for LED-CHL-XD-F. One solid, one with hole.	N/A	

MINI DEEP

LED-CHL-XD-MD	Mini deep format extruded channel. Includes snap-on frosted lens with mounting clips and screws.	4’	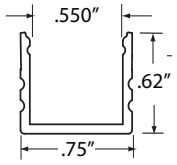
LED-CHL-XD-MD-WH	Mini deep format extruded channel. Includes snap-on frosted lens with mounting clips and screws. White.	4’	
LED-CHL-XD-MD-B	Mini deep format extruded channel. Includes snap-on frosted lens with mounting clips and screws. Black.	4’	
LED-CHL-XD-MD-6	Mini deep format extruded channel with flange. Includes snap-on frosted lens with mounting clips and screws.	6’	
LED-CHL-XD-MD-6-WH	Mini deep format extruded channel. Includes snap-on frosted lens with mounting clips and screws. White.	6’	
LED-CHL-XD-MD-6-B	Mini deep format extruded channel. Includes snap-on frosted lens with mounting clips and screws. Black.	6’	
LED-CHL-XD-MD-AMC	(2) Adjustable mounting brackets for LED-CHL-XD-MD	N/A	
LED-CHL-XD-MD-EC	(2) End caps for LED-CHL-XD-MD. One solid, one with hole.	N/A	
LED-CHL-XD-MD-MC	(2) Mounting clips for LED-CHL-XD-MD	N/A	

MINI DEEP FLANGED

LED-CHL-XD-MD-F	Mini deep format flanged extruded channel with flange. Includes snap-on frosted lens with mounting clips and screws.	4’	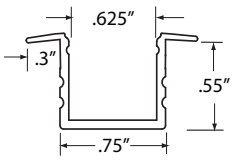
LED-CHL-XD-MD-F-WH	Mini deep format flanged extruded channel with flange. Includes snap-on frosted lens with mounting clips and screws. White.	4’	
LED-CHL-XD-MD-F-B	Mini deep format flanged extruded channel with flange. Includes snap-on frosted lens with mounting clips and screws. Black.	4’	
LED-CHL-XD-MD-F-6	Mini deep format extruded flanged channel with flange. Includes snap-on frosted lens with mounting clips and screws.	6’	
LED-CHL-XD-MD-F-6-WH	Mini deep format extruded flanged channel with flange. Includes snap-on frosted lens with mounting clips and screws. White.	6’	
LED-CHL-XD-MD-F-6-B	Mini deep format extruded flanged channel with flange. Includes snap-on frosted lens with mounting clips and screws. Black.	6’	
LED-CHL-XD-MD-F-DC	(2) Drywall mounting brackets for LED-CHL-XD-MD-F	N/A	
LED-CHL-XD-MD-F-EC	(2) End caps for LED-CHL-XD-MD-F One solid, one with hole.	N/A	

©2026 GM LIGHTING, LLC • www.gmlighting.net • Specifications subject to change without notice
18700 Ridgeland Ave., Tinley Park, IL 60477 • Toll-Free: (866) 671-0811 FAX: (708) 478-2640 • tech@gmlighting.net

LTR-E Economy Series

1.5W, 12VDC and 24VDC
LED Tape Specification Sheet

GMLighting®

COMPATIBLE CHANNELS- FIT CONNECTORS ON PG. 1

45° ANGLE MOUNT

Product No.	Description	Length	Dimensions
LED-CHL-45	Extruded angled (45°) channel. Includes snap-on frosted lens with mounting clips and screws.	4’	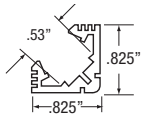
LED-CHL-45-EC	(2) End caps for LED-CHL-45 - one solid, one with hole	N/A	
LED-CHL-45-MC	(2) Mounting clips and screws for LED-CHL-45	N/A	

45° LARGE ANGLE MOUNT

LED-CHL-45-1200	Extruded angled (45°) channel. Includes snap-on frosted lens with mounting clips and screws.	4’	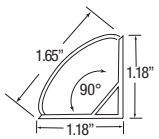
LED-CHL-45-1200-EC	(2) End caps for LED-CHL-45 - one solid, one with hole	N/A	
LED-CHL-45-1200-MC	(2) Additional mounting clips for LED-CHL-45-1200	N/A	

WIDE

LED-CHL-W	Wide format extruded channel. Includes snap-on frosted lens with mounting clips and screws.	4’	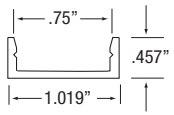
LED-CHL-W-6	Wide format extruded channel. Includes snap-on frosted lens with mounting clips and screws.	6’	
LED-CHL-W-AMC	(2) Adjustable mounting brackets for LED-CHL-W	N/A	
LED-CHL-W-EC	(2) End caps for LED-CHL-W - one solid, one with hole.	N/A	
LED-CHL-W-MC	(2) Additional mounting clips for LED-CHL-W	N/A	

MUD IN - STANDARD

LED-CHL-MI-ST6	Standard extruded aluminum mud-in channel. Includes snap-on frosted lens.	6’	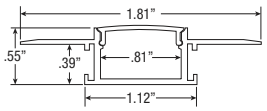
LED-CHL-MI-ST-EC	(2) End caps for LED-CHL-MI-ST6 one solid, one with hole.	N/A	

STANDARD STRAIGHT

LED-CHL2-4-CA	Silver channel, white lens **(2)** mounting clips, **(2)** screws	4’	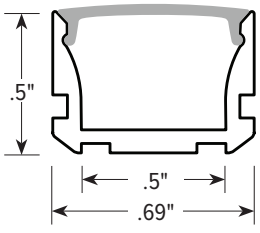
LED-CHL2-4-WH	White channel, white lens **(2)** mounting clips, **(2)** screws	4’	
LED-CHL2-4-BK	Black channel, white lens **(2)** mounting clips, **(2)** screws	4’	
LED-CHL2-6-CA	Silver channel, whilte lens, **(4)** mounting clips, **(4)** screws	6’	
LED-CHL2-6-WH	White channel, whilte lens, **(4)** mounting clips, **(4)** screws	6’	
LED-CHL2-6-BK	Black channel, whilte lens, **(4)** mounting clips, **(4)** screws	6’	
LED-CHL2 LENS-4-BK	Lens in black for LED-CHL2-4	4’	
LED-CHL2 LENS-6-BK	Lens in black for LED-CHL2-6	6’	
LED-CHL2-ECG	(2) End caps for LED-CHL2-CA: light gray, one solid, one with hole	N/A	
LED-CHL2-ECW	(2) End caps for LED-CHL2-WH: white, one solid, one with hole	N/A	
LED-CHL2-ECB	(2) End caps for LED-CHL2-BK: black, one solid, one with hole	N/A	
LED-CHL2-MC	(2) Mounting clips and (2) screws	N/A	
LED-CHL2-AMC	(2) Adjustable mounting clips and (2) screws	N/A	

©2026 GM LIGHTING, LLC • www.gmlighting.net • Specifications subject to change without notice
18700 Ridgeland Ave., Tinley Park, IL 60477 • Toll-Free: (866) 671-0811 FAX: (708) 478-2640 • tech@gmlighting.net

LTR-E Economy Series

1.5W, 12VDC and 24VDC
LED Tape Specification Sheet

GMLighting®

COMPATIBLE CHANNELS - SOLDERED LEADS ONLY

STANDARD STRAIGHT

Product No.	Description	Length	Dimensions
LED-CHL	Extruded channel. Includes snap-on frosted lens with mounting clips and screws.	4’	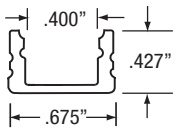
LED-CHL-6	Extruded channel. Includes snap-on frosted lens with mounting clips and screws.	6’	
LED-CHL-AMC	(2) Adjustable mounting brackets for LED-CHL	N/A	
LED-CHL-EC	(2) End caps for LED-CHL - one solid, one with hole.	N/A	
LED-CHL-MC	(2) Additional mounting clips for LED-CHL	N/A	

45° MINI ANGLE MOUNT

LED-CHL-45-MINI	Extruded angled (45°) silver channel. Includes snap-on white lens with (2) mounting clips and (2) screws.	4'	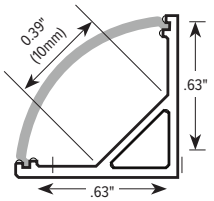
LED-CHL-45-MINI-B	Extruded angled (45°) black channel. Includes snap-on white lens with (2) mounting clips and (2) screws.	4'	
LED-CHL-45-MINI-EC	(2) End caps for LED-CHL-45-MINI: light gray, one solid, one with hole	N/A	
LED-CHL-45-MINI-EC-B	(2) End caps for LED-CHL-MINI-B: black, one solid, one with hole	N/A	
LED-CHL-45-MINI-MC	(2) Mounting clips and (2) screws for LED-CHL-45-MINI	N/A	
LED-CHL-45-M-LENS-BK	Lens in black for LED-CHL-45-MINI	4'	

BENDABLE

LED-CHL-BND-4	Extruded 4’ bendable channel. Inc. snap-on frosted lens with screws	4’	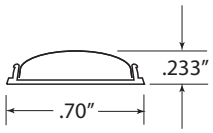
LED-CHL-BND-6	Extruded 6’ bendable channel. Inc. snap-on frosted lens with screws	6’	
LED-CHL-BND-EC	(2) end caps for LED-CHL-BND 4’ or 6’	N/A	
LED-CHL-BND-MC	(2) mounting clips and screws for LED-CHL-BND 4’ or 6’	N/A	

SLIM

LED-CHL-SLIM	Slim Channel, snap on white lens with mounting clips and screws	4’	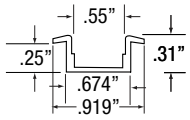
LED-CHL-SLIM-BRACKETS	(2) Mounting clips and screws for LED-CHL-SLIM	N/A	
LED-CHL-SLIM-EC	(2) End caps - one solid, one with wiring hole	N/A	

©2026 GM LIGHTING, LLC • www.gmlighting.net • Specifications subject to change without notice
18700 Ridgeland Ave., Tinley Park, IL 60477 • Toll-Free: (866) 671-0811 FAX: (708) 478-2640 • tech@gmlighting.net

SHWC LUXCONTROL WIFI CONTROLLER WIRING DIAGRAM

NOTE: Power supply **MUST NOT BE DIMMED** at the input to properly power the controls.

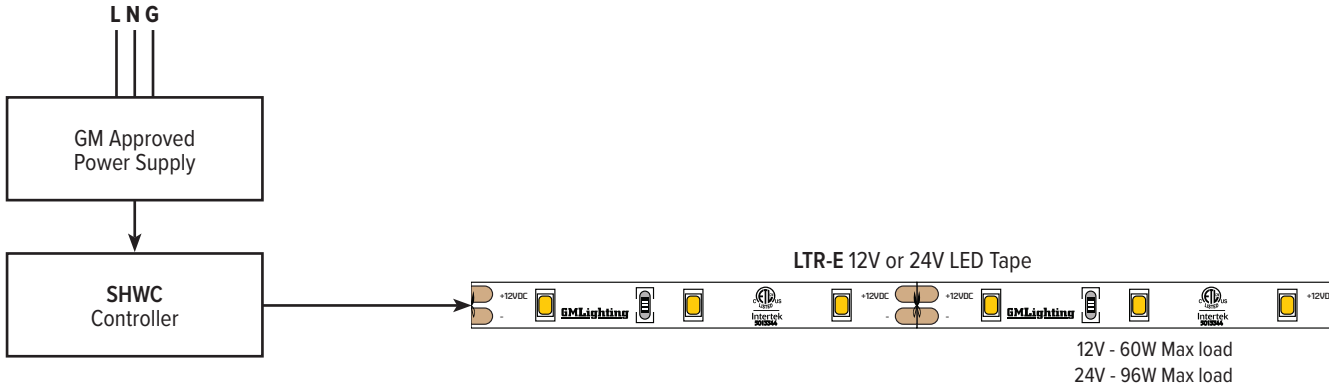

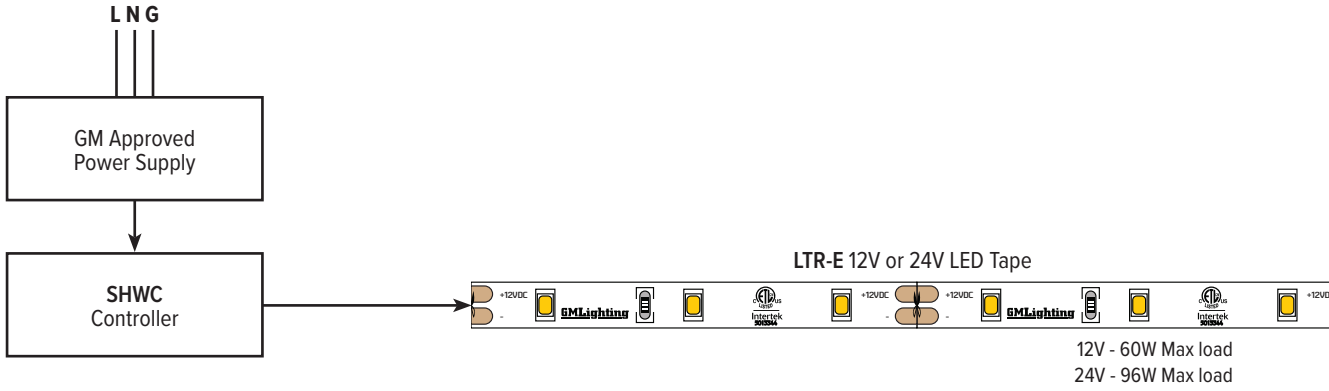

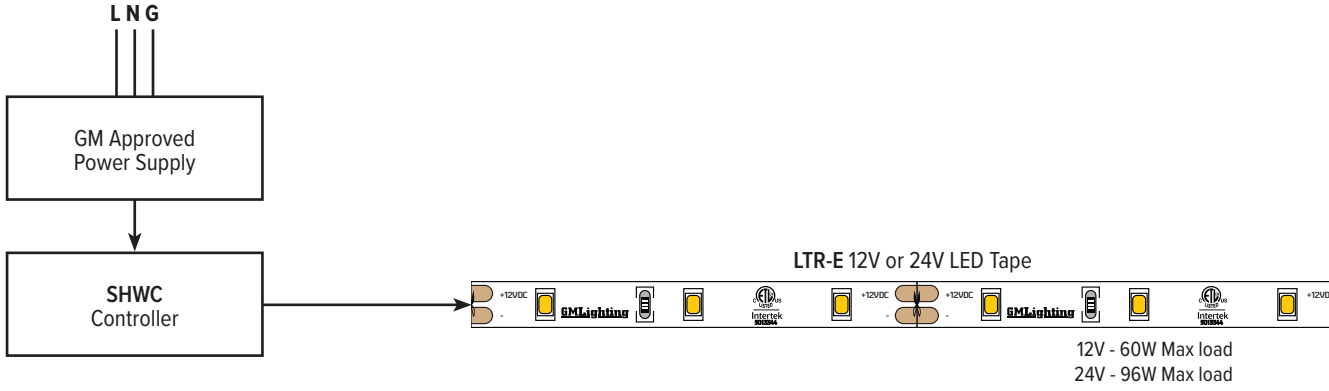

*Group multiple controllers in the **LUXCONTROL** app

©2026 GM LIGHTING, LLC • www.gmlighting.net • Specifications subject to change without notice

18700 Ridgeland Ave., Tinley Park, IL 60477 • Toll-Free: (866) 671-0811 FAX: (708) 478-2640 • tech@gmlighting.net

SHWC LUXCONTROL WIFI CONTROLLER WITH POWER REPEATER WIRING DIAGRAM

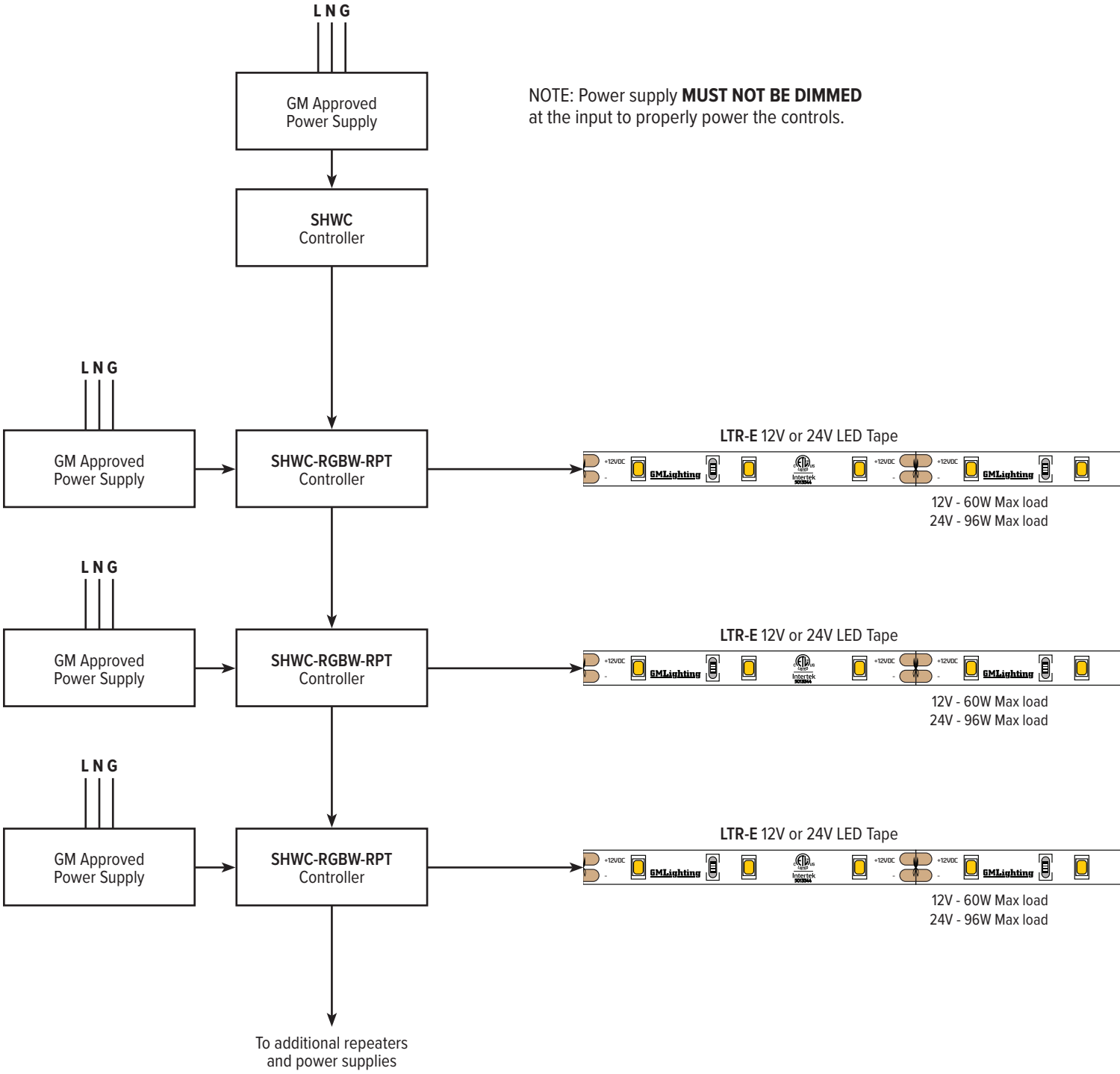

©2026 GM LIGHTING, LLC • www.gmlighting.net • Specifications subject to change without notice

18700 Ridgeland Ave., Tinley Park, IL 60477 • Toll-Free: (866) 671-0811 FAX: (708) 478-2640 • tech@gmlighting.net

SHWD LUXCONTROL WIFI DIMMER WIRING DIAGRAM

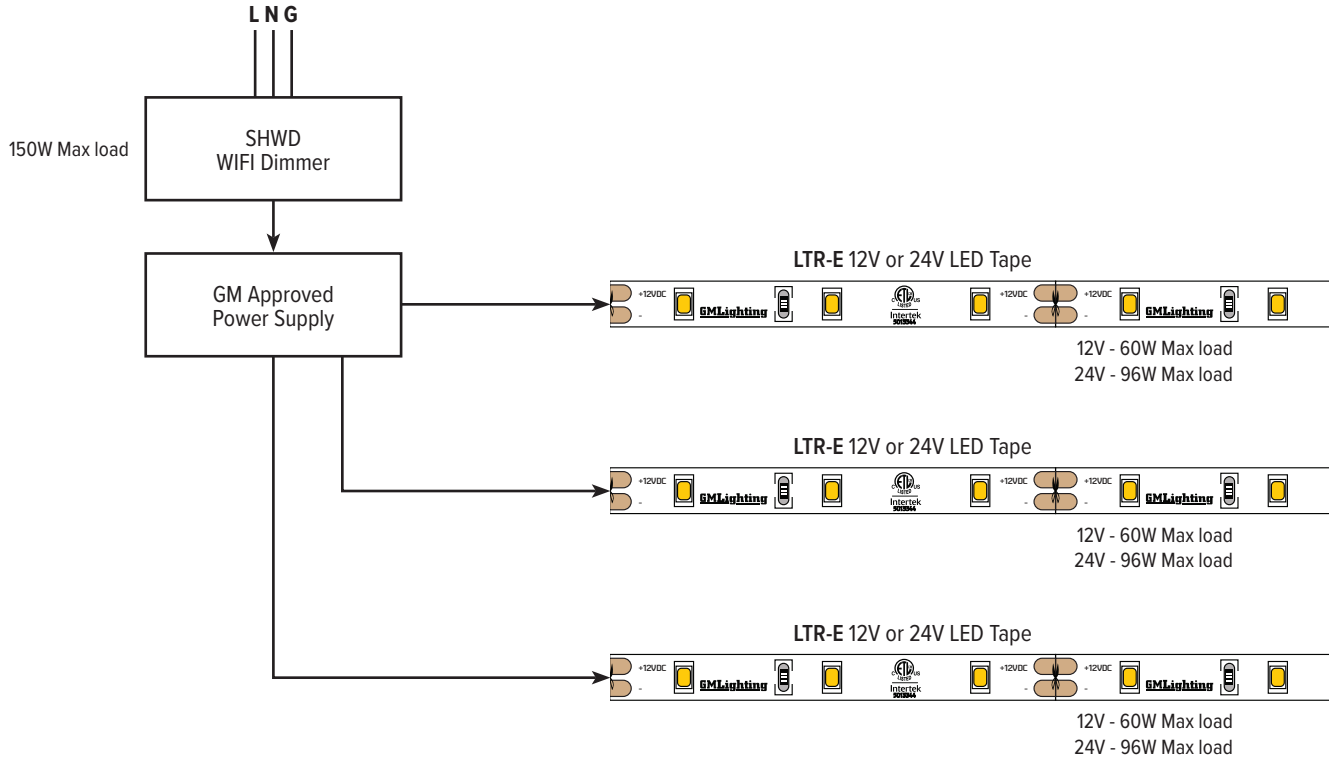

SWITCHLD SWD DRIVER AND DIMMER

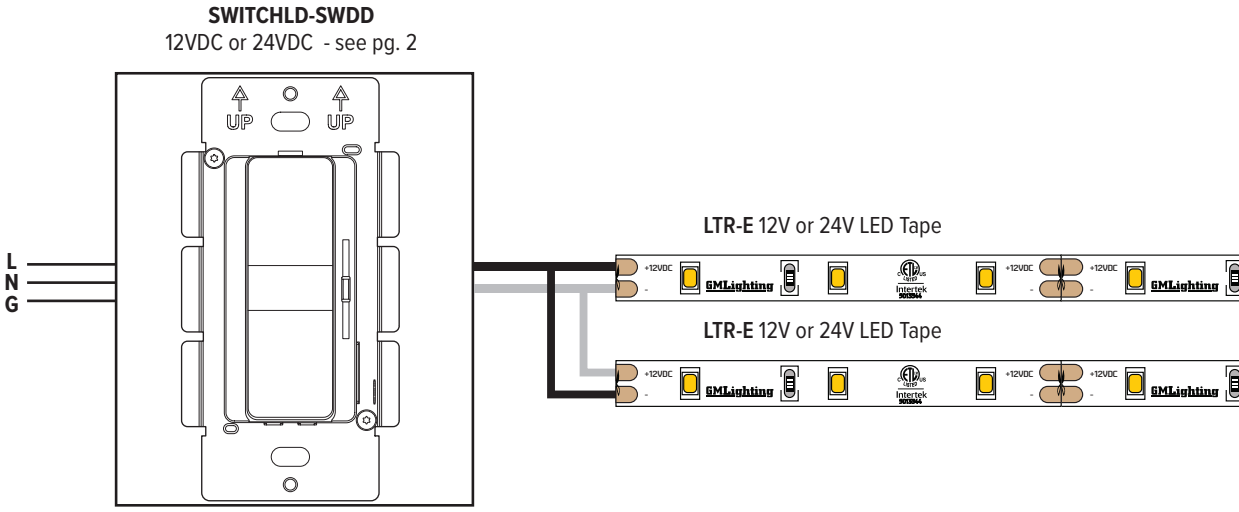

©2026 GM LIGHTING, LLC • www.gmlighting.net • Specifications subject to change without notice

18700 Ridgeland Ave., Tinley Park, IL 60477 • Toll-Free: (866) 671-0811 FAX: (708) 478-2640 • tech@gmlighting.net

LTR-E Economy Series

1.5W, 12VDC and 24VDC
LED Tape Specification Sheet

RF CONTROLLER

Incoming power for (L N G) options can be 120V or 277V.
Check power supply for proper input voltage and output power required.
Power Supply output voltage must match LED operating voltage. (24VDC)
Power supply used **MUST NOT BE DIMMED** at the input to properly power the controls.
See Controller instructions for pairing and wiring details.

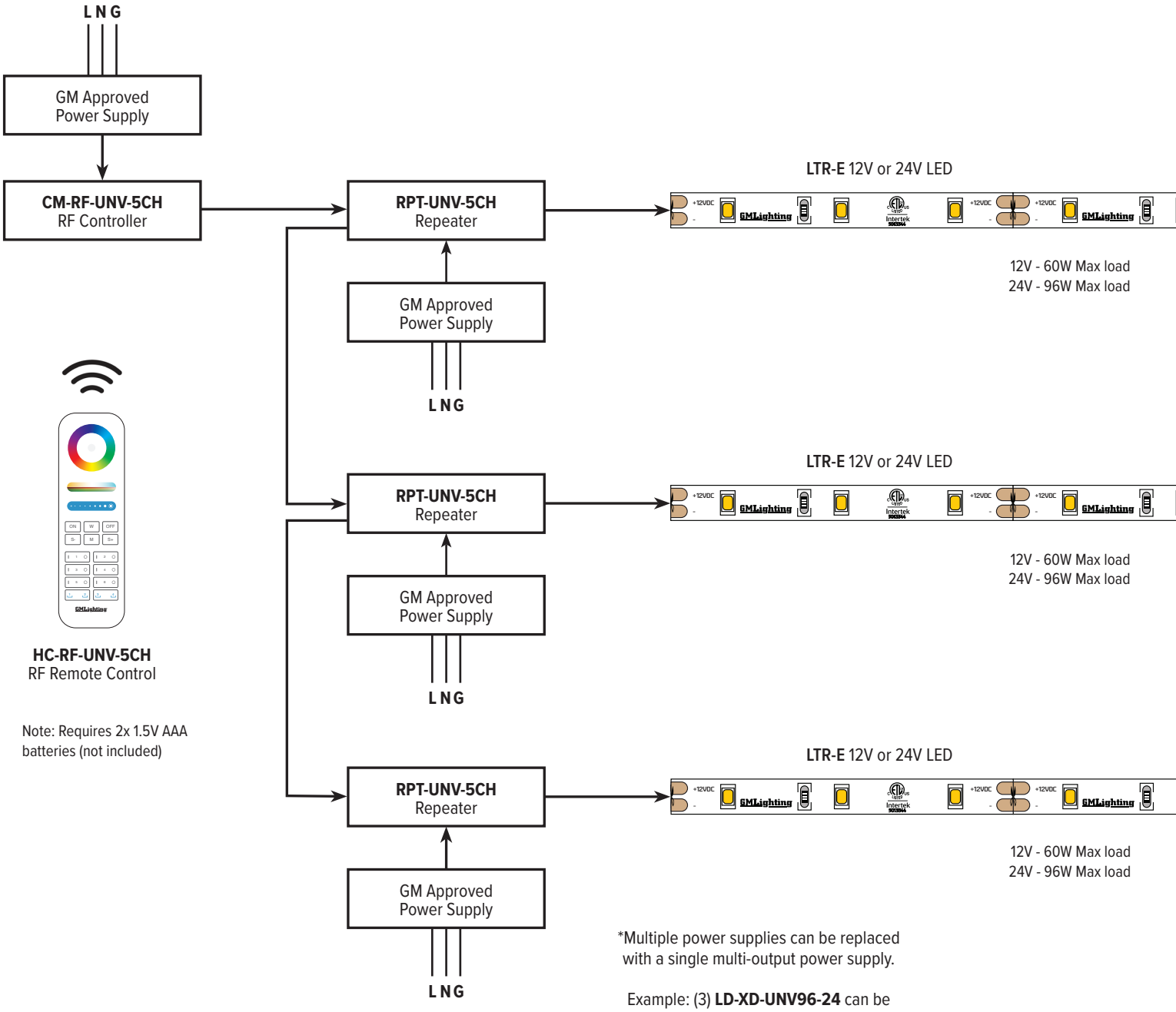

HC-RF-UNV-5CH
RF Remote Control

Note: Requires 2x 1.5V AAA batteries (not included)

*Multiple power supplies can be replaced with a single multi-output power supply.

Example: (3) **LD-XD-UNV96-24** can be replaced by (1) **LD-XD-UNV300-24**

LTR-E Economy Series

1.5W, 12VDC and 24VDC
LED Tape Specification Sheet

GMLighting®

RF REMOTE CONTROLLER AND REPEATER

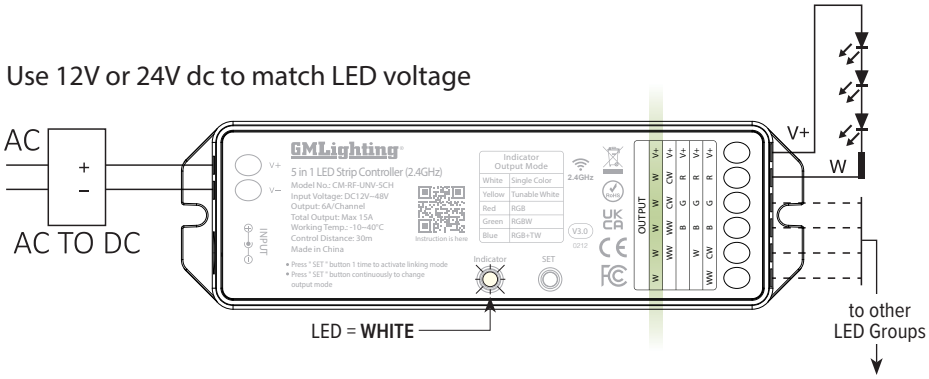

CM-RF-UNV-5CH
RF Controller

DIMENSIONS

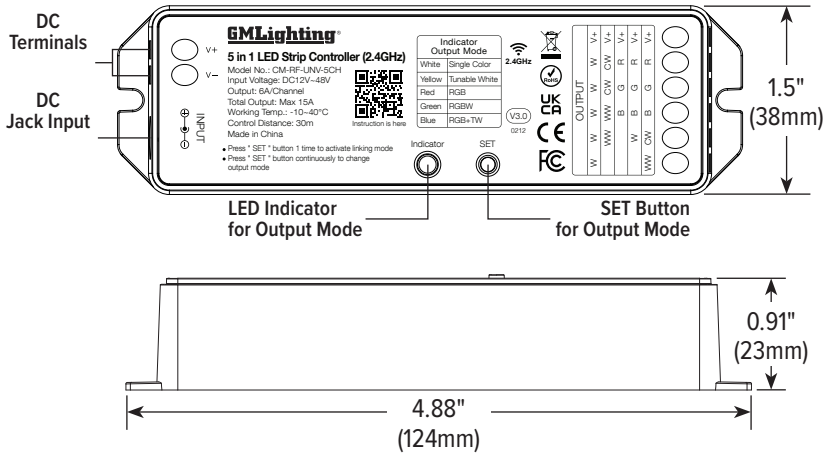

CM-RF-UNV-5CH
RF Controller

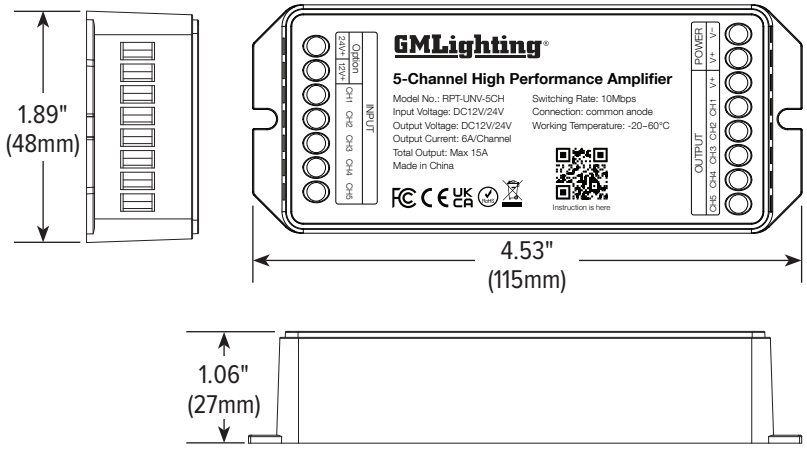

RPT-UNV-5CH
Repeater Amplifier

©2026 GM LIGHTING, LLC • www.gmlighting.net • Specifications subject to change without notice
18700 Ridgeland Ave., Tinley Park, IL 60477 • Toll-Free: (866) 671-0811 FAX: (708) 478-2640 • tech@gmlighting.net

LTR-E Economy Series

1.5W, 12VDC and 24VDC
LED Tape Specification Sheet

GMLighting®

RF HAND HELD REMOTE FEATURES AND DIMENSIONS

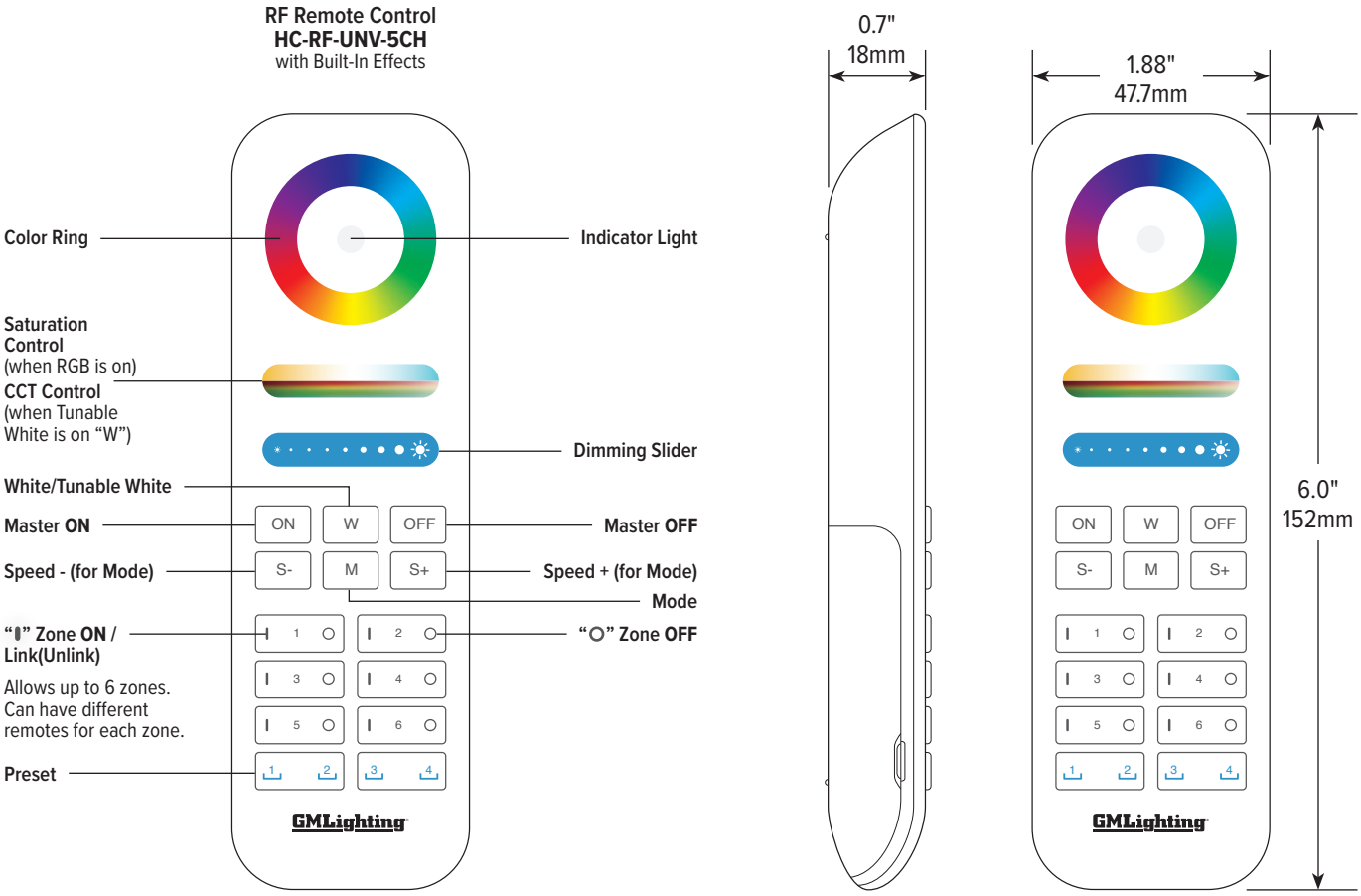

©2026 GM LIGHTING, LLC • www.gmlighting.net • Specifications subject to change without notice
18700 Ridgeland Ave., Tinley Park, IL 60477 • Toll-Free: (866) 671-0811 FAX: (708) 478-2640 • tech@gmlighting.net