GeoTask™

120V Wet Location Selectable Discs

GMLighting®

Project Name	Type
Catalog #	Date

120 VOLT | 90+ CRI | INDOOR WET LOCATION | TITLE 24-JA8 | ADA | ETL Intertek | 5 Yr. WARRANTY

PRODUCT OVERVIEW

GeoTask™ inspires a world of applications through nature's most elemental form. With the ability to switch between 2700K, 3000K, 3500K, 4000K, and 5000K in round 5", 8" and 15" nominal diameters, GeoTask is a star in any performance venue from task to hospitality, and from residential to commercial lighting applications in a wet location luminaire.

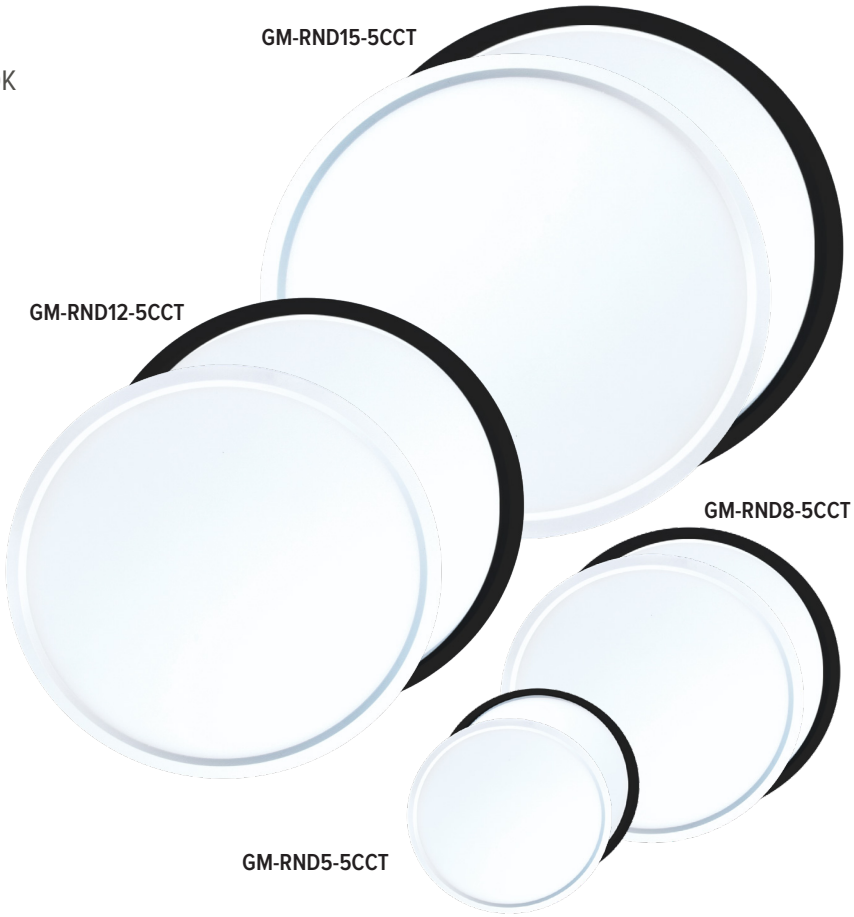

FEATURES

- 5CCT Selectable: 2700K/3000K/3500K/4000K/5000K
- 120V (remote power supply not required)
- Dimmable (Triac)
- Shallow profile
- Supplied with universal mounting plate
- Edge-Lit Technology for diode-free illumination

SPECIFICATIONS

ELECTRICAL

- 120V
- 10W / 15W / 23W / 30W

CERTIFICATIONS

- ETL
- Title 24 / JA8
- Ceiling Mount: Wet location, indoor covered ceiling only
- Wall Mount: Dry or damp location, indoor only, ADA compliant

PHOTOMETRIC

- 90+ CRI
- 5CCT Selectable: 2700K / 3000K / 3500K / 4000K / 5000K

OPERATING TEMP

- -4°F to 104°F (-20°C to 40°C)

WARRANTY

- 5 years

ORDERING INFORMATION

EXAMPLE: GM-RND5-5CCT-BK

Catalog No.	Size	Color Temp.	Finish
GM-RND	**5**" (Diameter)	**5CCT** (Selectable 2700K, 3000K, 3500K, 4000K, 5000K)	**BK** (Black) or **WH** (White)
	8" (Diameter)		
	12" (Diameter)		
	15" (Diameter)		

©2026 GM LIGHTING, LLC • www.gmlighting.net • Specifications subject to change without notice
18700 Ridgeland Ave., Tinley Park, IL 60477 • Toll-Free: (866) 671-0811 FAX: (708) 478-2640 • tech@gmlighting.net

GeoTask™

120V Wet Location Selectable Discs

GMLighting®

PHOTOMETRIC INFORMATION

Catalog No.	Wattage	2700K	3000K	3500K	4000K	5000K
GM-RND5-5CCT	10W	751 lm	763 lm	797 lm	808 lm	804 lm
GM-RND8-5CCT	15W	1178 lm	1254 lm	1343 lm	1314 lm	1205 lm
GM-RND12-5CCT	22W	1310 lm	1423 lm	1541 lm	1512 lm	1401 lm
GM-RND15-5CCT	30W	1698 lm	1808 lm	1951 lm	1930 lm	1786 lm

ACCESSORIES

Model	Description
GM-RND5-CVR-BN	Brushed Nickel Cover for GM-RND5



GM-RND5-CVR-BN

DIMENSIONS

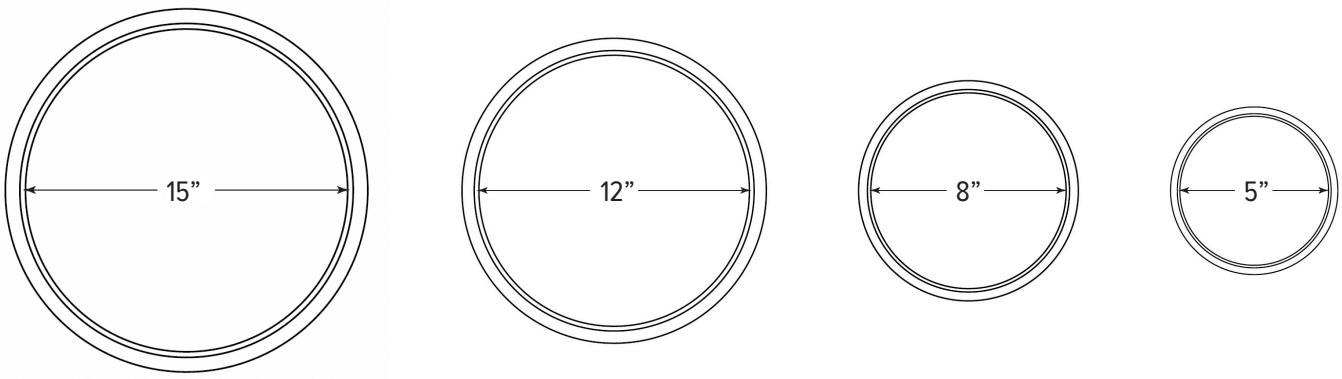

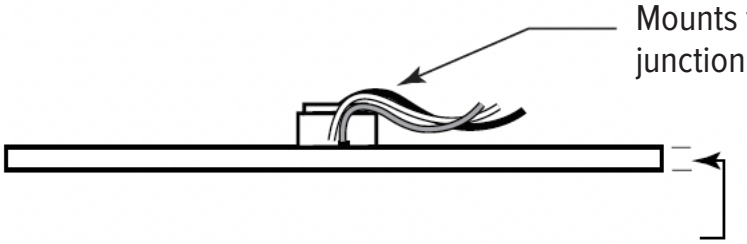

5” & 8” dia. = 5/8” High
12” & 15” dia = 1” High

NOTES:

12” and 15” not compatible with mud in ring or pancake box

Fixture has gasket to seal at outer edge for smooth surfaces. For improved seal against water entry or for uneven surfaces, use silicone sealant to fill gaps between the fixture and mounting surface.

©2026 GM LIGHTING, LLC • www.gmlighting.net • Specifications subject to change without notice
18700 Ridgeland Ave., Tinley Park, IL 60477 • Toll-Free: (866) 671-0811 FAX: (708) 478-2640 • tech@gmlighting.net